TUTORIAL – 2

1. Convert the hexadecimal number 64CD to binary, and then convert it from binary to octal.

2. Add and multiply the binary numbers 1011 and 101 without converting them to decimal.

3. Represent the decimal number 6248 in BCD.

4. Assign a binary code in an orderly manner to the 52 playing cards. Use the minimum number of bits.

5. Simplify the following Boolean expression to TWO literals:

   $$ABC'D + A'BD + ABCD$$

   Draw logic diagrams of the circuits that implement the original and simplified expressions. What is the hardware reduction achieved using the simplified expression?

6. For the combinational logic circuit shown in Fig. 2-1, assume that the delay of each gate is T_d. Express the critical path delays in terms of T_d to obtain F_1 and F_2.

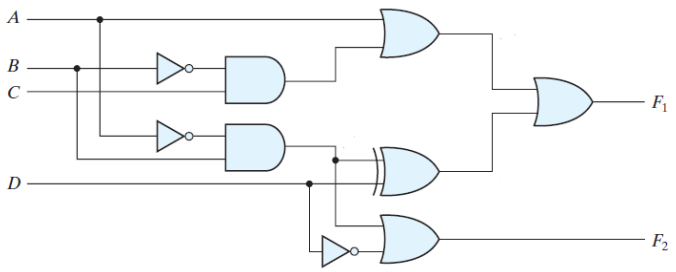

Figure 2-1

7. What logic gate realization is required to turn on the light bulb in Fig. 2-2?

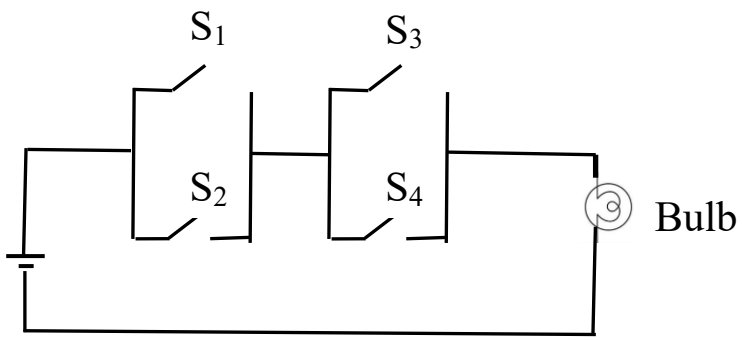

Figure 2-2

8. For the combinational logic gate circuit shown in Fig. 2-3, the output Y is 0. What are the possible values of the inputs A, B, C and D that satisfy the given output value?

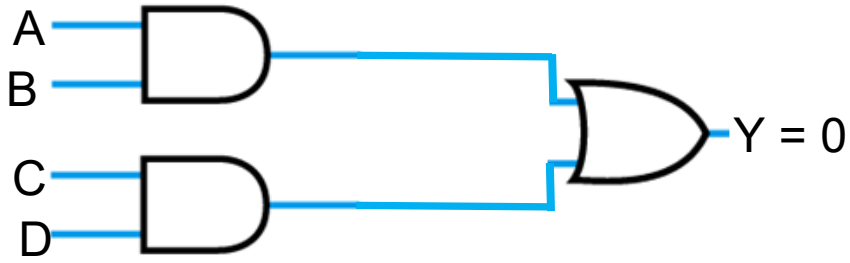

Figure 2-3

9. The output waveform 'Q' and clock 'CLK' of a D flip-flop is given in Fig. 2-4. Which of the following is (are) the correct input waveform(s)?

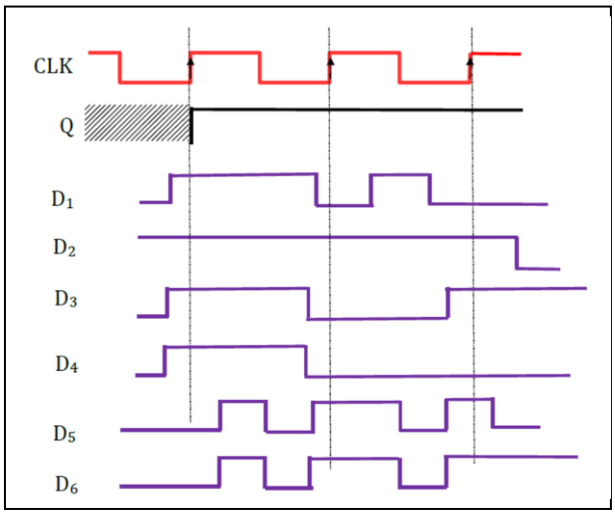

Figure 2-4

END OF DOCUMENT